Milesight

2/5 Megapixel 23x/30x/36x/42x H.265 Speed Dome Network Camera

H.265+ HEVC | Starlight | Super WDR | IR | Weather Proof | Vandal-proof | Privacy Masking | SD XC | Profile S G T Onvif | PoE | VCA

IP66

IK10

MS-C2841-X36R(P)B/MS-C2941-X23R(P)B/
MS-C2941-X30R(P)B/MS-C2941-X42R(P)B/
MS-C5341-X23H(P)B/MS-C5341-X30H(P)B/
MS-C5341-X42H(P)B

DATASHEET

KEY FEATURES

- Smart Stream (Bandwidth, storage and bit rate are saved with Smart Stream On, eg, H.265+ saves 70%~80% bandwidth that of H.264.)
- Smart IR II (Combining the High Beam and Low Beam to adjust IR intensity to fit different lighting conditions.)
- 0.001Lux Starlight (Deliver high detailed color images even in low light environment reaching 0.001Lux.)
- 140dB Super WDR (Excellent performance even when the ratio of the luminosity of brightest and darkest is up to 140dB.)
- Smart PTZ Motion Detection (Pan and tilt to the position of motion detected area automatically and zoom in synchronously.)
- IR Distance up to 250m (Enabling 250 meters distinct images at night with IR LEDs.)
- 255 Preset Positions (The user can easily control the lens position via mouse to monitor interested area and set up to 255 preset positions for patrolling.)
- Keyboard Control (Shortcut keys for PTZ control via Milesight Keyboard.)

Video Content Analysis

Milesight VCA with 10 detection modes provides advanced, accurate smart video analysis for Milesight network cameras, enabling the comprehensive surveillance function and quicker response to different monitoring scenes.

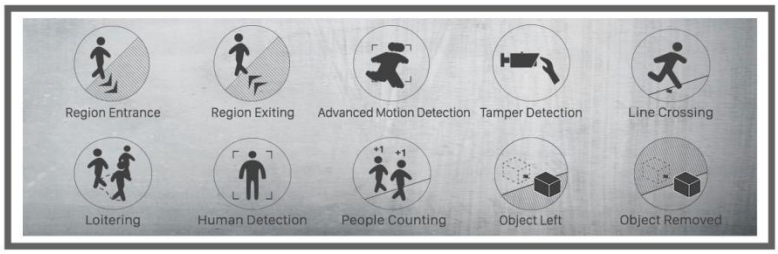

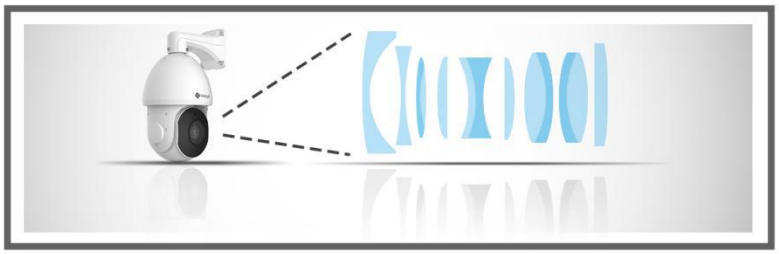

23X/30X/36X/42X Optical Zoom

The 23X/30X/36X/42X optical zoom can zoom up to distant subjects while still maintaining the clarity, delivering high quality video over the entire zoom range.

360° Endless Pan, 0°~90° Auto Flip Tilt

With a sophisticated pan/tilt mechanism, Milesight Speed Dome Network Camera provides fast, precise movement with endless 360-degree pan and 90-degree tilt. The user can easily control the lens position via mouse to monitor area of interest and set up to 255 preset positions for patrolling. There are up to 8 patrol routes and maximum 4 patterns of the manual operation paths (for Pan, Tilt, Zoom and Focus) which can be set as required. Moreover, the user is able to schedule specific PTZ tasks by date and time.

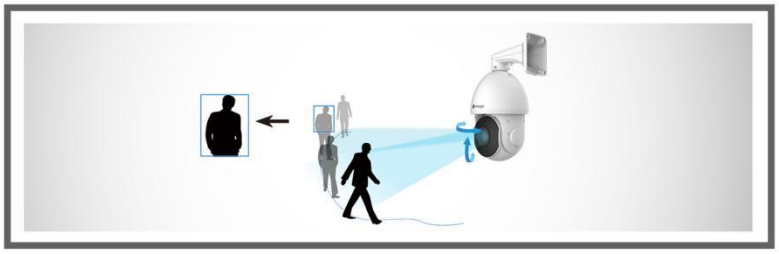

PTZ Auto Tracking

Once PTZ Auto Tracking function enabled, Milesight Network Camera could leverage motor mechanism to perform Pan/Tilt/Zoom to track the moving object automatically and adjust zoom status flexibly according to the object distance with the powerful optical zoom capability.

23x/30x/36x/42x H.265 Speed Dome Network Camera

	Model	MS-C2841-X36R(P)B (2MP)	MS-C2941-X23R(P)B (2MP)	MS-C2941-X30R(P)B (2MP)	MS-C2941-X42R(P)B (2MP)
Camera	Image Sensor	1/2" Progressive Scan CMOS	1/2.8" Progressive Scan CMOS		
	Min. Illumination	Color: 0.001Lux@F1.2 B/W: 0Lux with IR on	Color: 0.002Lux@F1.2 B/W: 0Lux with IR on		
	WDR	140dB Super WDR			
	Shutter Time	1/100000s~1s			
	Day&Night	ICR Filter Auto Switch			
	S/N	>55 dB			
	Digital Zoom	16x			
Lens	Focal Length	5.7~205.2mm @F1.55~F4.8 **36x** Optical Zoom	5~117mm @F1.5~F3.5 **23x** Optical Zoom	4.7~141mm @F1.5~F4.0 **30x** Optical Zoom	7~300mm @F1.8~F6.5 **42x** Optical Zoom
	Zoom Speed	Approx 4s (Optical Wide-Tele)			
	Field of View	H63°~H3°/D69°~D3°/ V38°~V1°	H60°~H3°/D69°~D4°/ V35°~V2°	H62°~H3°/D70°~D3°/ V37°~V1°	H45°~H2°/D50°~D2°/ V27°~V1°
	Minimum Working Distance	100~1000mm (Wide-Tele)	10~1500mm (Wide-Tele)	100~1500mm (Wide-Tele)	1200~1500mm(Wide-Tele)
PTZ	Pan Range/Pan Speed	360°endless / Pan Manual Speed: 0.5°~180°/s, Pan Preset Speed: 240°/s			
	Tilt Range/Tilt Speed	0°~90°(Auto Flip) / Tilt Manual Speed: 0.5°~120°/s, Tilt Preset Speed: 200°/s			
	Proportional Zoom	Support			
	Preset Quantity	255			
	Preset Freezing	Support			
	Patrol	8 Patrols, up to 48 presets each patrol			
	Pattern	4 Patterns			
	Power Off Memory	Support			
	PTZ Position Display	ON/OFF			
	3D positioning	Support			
IR	IR Distance	Up to 300m	Up to 200m	Up to 200m	Up to 300m
	IR Angle	Auto/Manual			
Video	Max. Image Resolution	1920x1080			
	Primary Stream	60fps@(1920x1080, 1280x960, 1280x720, 704x576)			
	Secondary Stream	30fps@(704x576, 640x480, 640x360, 352x288, 320x240, 320x192, 320x176)			
	Tertiary Stream	30fps@(1920x1080, 1280x720, 704x576, 640x480, 640x360, 320x240, 320x192, 320x176)			
	Video Compression	H.265+/H.265(HEVC)/H.264+/H.264/MJPEG			
	Video Bit Rate	16Kbps~16Mbps(CBR/VBR Adjustable)			
	Image Setting	Brightness/Contrast/Saturation/Sharpness			
Network	Ethernet	1*RJ45 10M/100M Ethernet Port			
	Network Storage	NAS(Support NFS, SMB/CIFS)			
	Protocol	IPv4/IPv6, TCP, UDP, RTP, RTSP, RTCP, HTTP, HTTPS, DNS, DDNS, DHCP, FTP, NTP, SMTP, SNMP,UPnP, SIP, PPPoE, VLAN, 802.1x, QoS, IGMP, ICMP, SSL			
Audio	Audio Compression	G.711/AAC			
	Audio I/O	1/1			
System	Alarm I/O	2/2			
	RS485	Support			
	Storage	Support microSD/SDHC/SDXC Card Local Storage, up to 256G			
	Advanced Function	Auto Tracking, Privacy Masking, BLC, HLC, 2D DNR, 3D DNR, ROI, Defog, AWB, EIS, IP Address Filtering, AGC, Anti-flicker, Corridor Mode, Deblur			
	SIP/VoIP Support	Yes, Voice & Video-over-IP			
	Event Trigger	Motion Detection, Network Disconnection, External Input, Audio Alarm, etc.			
	Event Action	FTP Upload, SMTP Upload, SD Card Record, External Output, SIP Phone, PTZ Motion, HTTP Notification, etc.			
	Video Analysis (Optional)	Region Entrance, Region Exiting, Advanced Motion Detection, Tamper Detection, Line Crossing, Loitering, Human Detection, People Counting, Object Left, Object Removed			
	System Compatibility	ONVIF Profile S & G & T			
General	Working Condition	Temperature: -40℃~60℃ / Humidity: 0~90%(Non-condensing)			
	Power Supply	PoE (802.3at)(Optional) / AC 24V/3A±10%			
	Power Consumption	13W MAX / 25W MAX (With IR on) for -PB Series 16W MAX / 35W MAX (With IR on) for -B Series			
	Weather Proof/Housing	Up to IP66-rated for Weather-resistant Performance / Vandal-proof IK10-rated Metal Housing(Optional)			
	Surge Protection	6KV			
	Dimensions/Weight	Φ205mmX308mm/4Kg			
	Warranty	2 Years / 3 Years (Optional)			

23x/30x/36x/42x H.265 Speed Dome Network Camera

	Model	MS-C5341-X23H(P)B (5MP)	MS-C5341-X30H(P)B (5MP)	MS-C5341-X42H(P)B (5MP)
Camera	Image Sensor	1/2.8" Progressive Scan CMOS		
	Min. Illumination	Color: 0.005Lux@F1.2 B/W: 0Lux with IR on		
	WDR	120dB Super WDR		
	Shutter Time	1/100000s~1s		
	Day&Night	ICR Filter Auto Switch		
	S/N	>55 dB		
	Digital Zoom	16x		
Lens	Focal Length	5~117mm @F1.5~F3.5 **23x** Optical Zoom	4.7~141mm @F1.5~F4.0 **30x** Optical Zoom	7~300mm @F1.8~F6.5 **42x** Optical Zoom
	Zoom Speed	Approx 4s (Optical Wide-Tele)		
	Field of View	H55°~H3°/D68°~D4°/V42°~V2°	H58°~H3°/D71°~D3°/V44°~V2°	H43°~H2°/D53°~D2°/V33°~V1°
	Minimum Working Distance	10~1500mm (Wide-Tele)	100~1500mm (Wide-Tele)	1200~1500mm (Wide-Tele)
PTZ	Pan Range/Pan Speed	360°endless / Pan Manual Speed: 0.5°~180°/s, Pan Preset Speed: 240°/s		
	Tilt Range/Tilt Speed	0°~90°(Auto Flip) / Tilt Manual Speed: 0.5°~120°/s, Tilt Preset Speed: 200°/s		
	Proportional Zoom	Support		
	Preset Quantity	255		
	Preset Freezing	Support		
	Patrol	8 Patrols, up to 48 presets each patrol		
	Pattern	4 Patterns		
	Power Off Memory	Support		
	PTZ Position Display	ON/OFF		
	3D positioning	Support		
IR	IR Distance	Up to 200m	Up to 200m	Up to 300m
	IR Angle	Auto/Manual		
Video	Max. Image Resolution	2592x1944		
	Primary Stream	30fps@(2592x1944), 60fps@(1920x1080, 1280x960, 1280x720, 704x576)		
	Secondary Stream	30fps@(704x576, 640x480, 640x360, 352x288, 320x240, 320x192, 320x176)		
	Tertiary Stream	30fps@(1920x1080, 1280x720, 704x576, 640x480, 640x360, 320x240, 320x192, 320x176)		
	Video Compression	H.265+/H.265(HEVC)/H.264+/H.264/MJPEG		
	Video Bit Rate	16Kbps~16Mbps(CBR/VBR Adjustable)		
	Image Setting	Brightness/Contrast/Saturation/Sharpness		
Network	Ethernet	1*RJ45 10M/100M Ethernet Port		
	Network Storage	NAS(Support NFS, SMB/CIFS)		
	Protocol	IPv4/IPv6, TCP, UDP, RTP, RTSP, RTCP, HTTP, HTTPS, DNS, DDNS, DHCP, FTP, NTP, SMTP, SNMP,UPnP, SIP, PPPoE, VLAN, 802.1x, QoS, IGMP, ICMP, SSL		
Audio	Audio Compression	G.711/AAC		
	Audio I/O	1/1		
System	Alarm I/O	2/2		
	RS485	Support		
	Storage	Support microSD/SDHC/SDXC Card Local Storage, up to 256G		
	Advanced Function	Auto Tracking, Privacy Masking, BLC, HLC, 2D DNR, 3D DNR, ROI, Defog, AWB, EIS, IP Address Filtering, AGC, Anti-flicker, Corridor Mode, Deblur		
	SIP/VoIP Support	Yes, Voice & Video-over-IP		
	Event Trigger	Motion Detection, Network Disconnection, External Input, Audio Alarm, etc.		
	Event Action	FTP Upload, SMTP Upload, SD Card Record, External Output, SIP Phone, PTZ Motion, HTTP Notification, etc.		
	Video Analysis (Optional)	Region Entrance, Region Exiting, Advanced Motion Detection, Tamper Detection, Line Crossing, Loitering, Human Detection, People Counting, Object Left, Object Removed		
	System Compatibility	ONVIF Profile S & G & T		
General	Working Condition	Temperature: -40℃~60℃ / Humidity: 0~90%(Non-condensing)		
	Power Supply	PoE (802.3at)(Optional) / AC 24V/3A±10%		
	Power Consumption	13.5W MAX / 25.5W MAX (With IR on) for -PB Series 16.5W MAX / 35.5W MAX (With IR on) for -B Series		
	Weather Proof/Housing	Up to IP66-rated for Weather-resistant Performance / Vandal-proof IK10-rated Metal Housing(Optional)		
	Surge Protection	6KV		
	Dimensions/Weight	Φ205mmX308mm/4Kg		
	Warranty	2 Years / 3 Years (Optional)		

V7.17

23x/30x/36x/42x H.265 Speed Dome Network Camera

Structure Diagrams

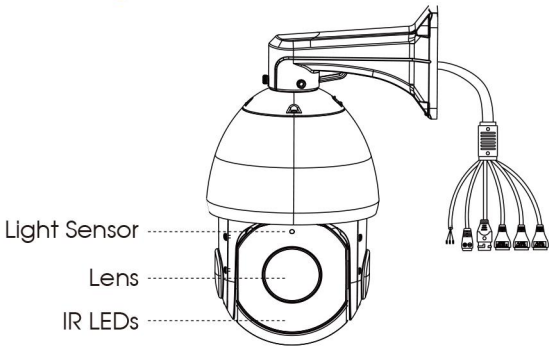

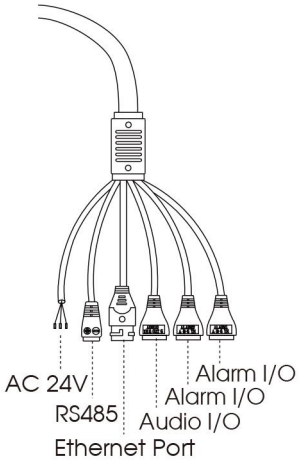

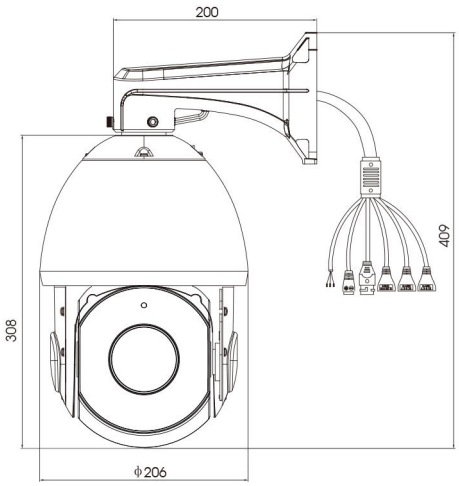

Wall Mount

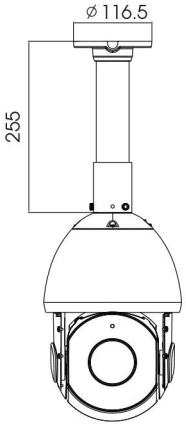

Ceiling Mount

Units: mm

Accessories Support

A01 Pole Mount

Weight: 720g
Dimensions: 170*51.5*152.6mm

A03 External Corner Bracket

Weight: 900g
Dimensions: 170*152.6*76.3mm

A41 Wall Mount

Weight: 400g
Dimensions: 200*129*100mm

A42 Pendant Mount

Weight: 650g
Dimensions: 116.5*225mm

A43 Junction Box

Weight: 1000g
Dimensions: 195*164*80mm

Naming Convention

MS-C	2	9	41-	X30	R	P	B
	2 - 2MP (5 - 5MP)	Sensor	Speed Dome	X30 - 30X Optical Zoom (X23 - 23X Optical Zoom / X36 - 36X Optical Zoom / X42 - 42X Optical Zoom)	R - High Frame Rate (60fps) (H - 30fps@5MP Series)	PoE	H.265

acam CCTV SOLUTIONS

Acam Technology Ltd | www.acamtechnology.com

sales@acamtechnology.com

Unit 3, Prime Enterprise Park
Prime Parkway
Derby DE1 3QB
United Kingdom
Tel: +44 1332 382555